NOTES:

1. MATERIAL: 11 GA. SHEET STEEL
   FINISH: EPOXY POWDER COAT ASA61 GREY
2. WELD & GRIND REAR CORNERS.
3. MANUFACTURER SHALL SUPPLY THE FOLLOWING GRADE 8 YELLOW ZINC CHROMATE HARDWARE (1 PACKAGE PER TRAY):

QTY	DESCRIPTION
8	1/4-20x3/4 LONG ELEVATOR BOLTS
2	3/8-16x1.00 LONG CARRIAGE HEAD BOLTS
2	3/8-16 NUTS
8	1/4-20 NUTS
4	1/4 FLAT WASHERS
2	3/8 FLAT WASHERS
4	1/4 LOCK WASHERS
2	3/8 LOCK WASHERS
4	1/4 GROUNDING WASHERS

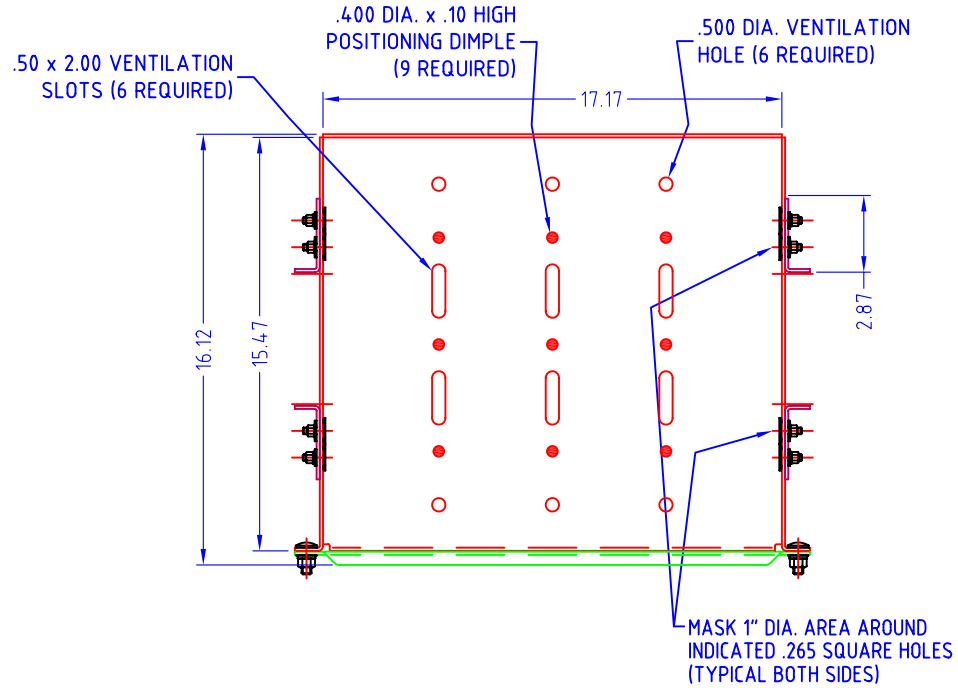

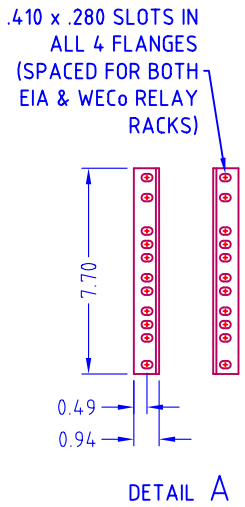

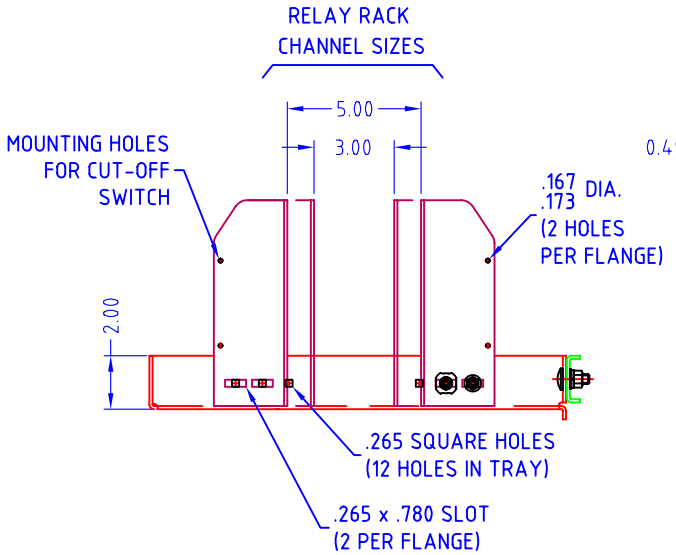

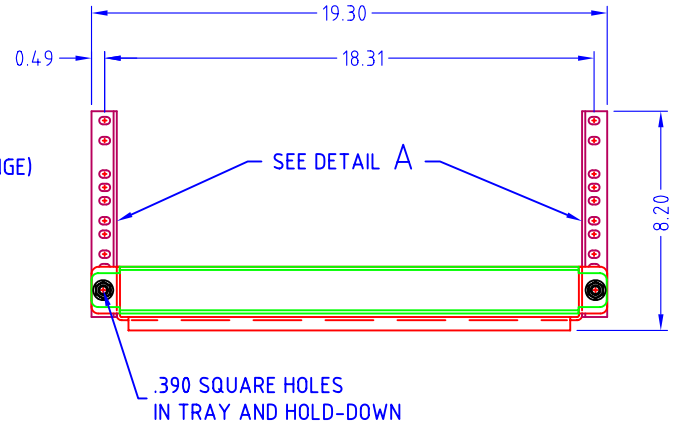

DATE	REV	DESCRIPTION
10-25-06	1	TRAY MODIFIED FOR 12UMTX100/19FT BATTERIES.
11-06-02	0	ADDED "GRADE 8" TO NOTE 3. CHANGED HARDWARE SUPPLIED. CHANGED CENTER TO CENTER DIMS FOR .410x.280 SLOTS, AND SIZE OF SQUARE AND RECTANGULAR HOLES.
8-20-02	B	ADDED .167-.173 DIA. HOLES, CHANGED SHAPE OF FLANGES.

FIAMM ENERGY DIVISION

SCALE	DRAWN BY	APPROVED BY
	GA	

TITLE: BATTERY TRAY FOR 19" RELAY RACKS

DATE	DRAWING NUMBER	REV.
07-12-01	FR3050	1